comer industries driveshafts

End fittings		Max. torque
Tractor	Cod: C12	–
Implement	Cod: 112	–

Notes:

CE CERTIFIED

Warning !
Sections of driveline marked ⚠ are not shielded and must be shielded by an interactive guarding system.
COMER spa declines responsibility if proper guards are not provided or maintained.

Features

Series:	T
Type:	20
Code:	07.225.040.10
Description:	T201410ENC12112
Customer's code:	–
Colour:	Yellow

Last drawing

Index: – Date: –

Application

–

Driveline data

X	1 3/8" Z6 DIN 9611
Y	1 3/8" Z6 DIN 9611
E	1285–50.59"
I	1300–51.18"
P	1220–48.03"

Overlap

	Steel tubes	Guard
Max.	1265–49.8"	1200–47.24"
Min.	405–15.94"	340–13.39"

Greasing point

1)	–
2)	–

The dimensioning is cross to cross

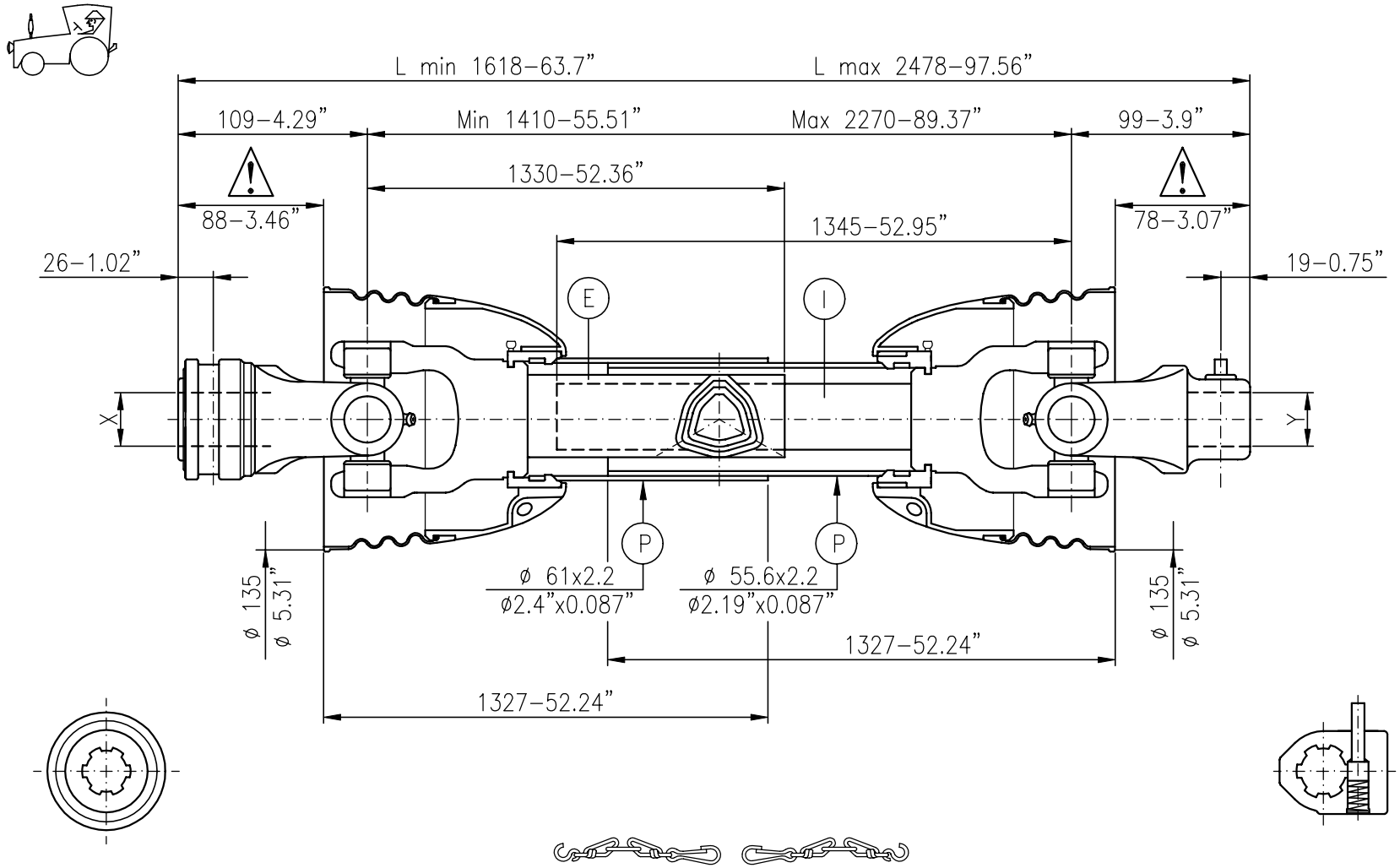

Cross and tubes

23.8 | 61.3 — 36x3.2 — 29x4

Data 540 r.p.m.				Data 1000 r.p.m.				540 min.$^{-1}$ r.p.m. max.
KW	CV	Nm.	in.lb.	KW	CV	Nm.	in.lb.	
15	21	270	2400	23	31	220	1950	

Continuous operation data and conditions,working angle 5°, average life 1000 hours

Data for only critical velocity			
540 r.p.m.		1000 r.p.m.	
Max.	–	Max.	–
L max.	–	L max.	–
Checked:		Signed by:	F.L.

Customer: – –

Date: 21–09–09